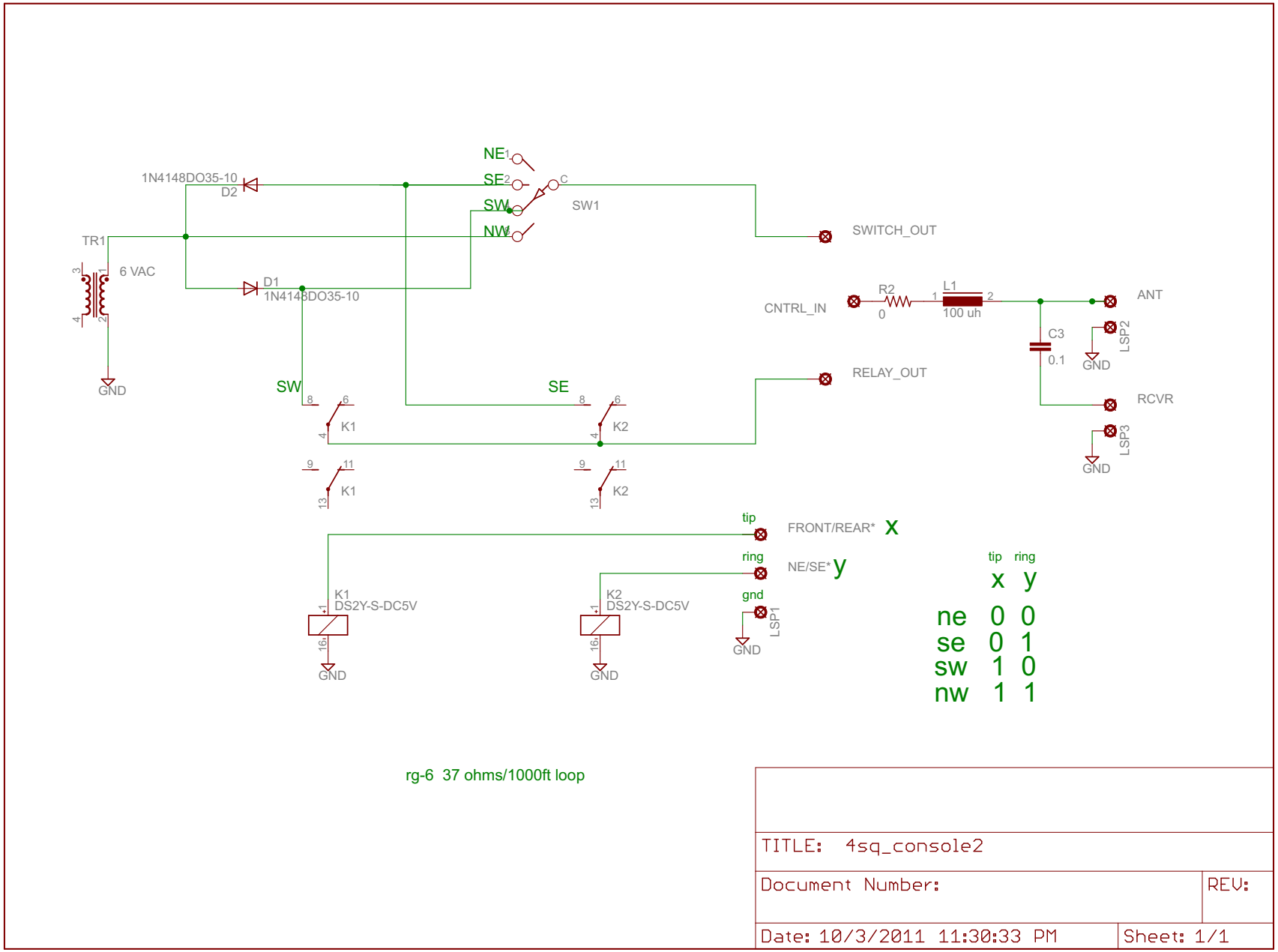
NE
SE
SW
NW
SW1
C
1N4148DO35-10
D2
TR1
6 VAC
D1
1N4148DO35-10
GND
SW
SE
K1
K2
SWITCH_OUT
CNTRL_IN
R2
0
L1
100 uh
C3
0.1
ANT
LSP2
RELAY_OUT
RCVR
LSP3
tip
FRONT/REAR* x
ring
NE/SE* y
gnd
LSP1
K1
DS2Y-S-DC5V
K2
DS2Y-S-DC5V
tip ring
x y
ne 0 0
se 0 1
sw 1 0
nw 1 1
rg-6 37 ohms/1000ft loop
TITLE: 4sq_console2
Document Number:
REV:
Date: 10/3/2011 11:30:33 PM
Sheet: 1/1